2006 SHOW RULES

The Utah Wild Horse & Burro Festival Committee offers a Wild Horse and Burro Show each year under the regulations set forth below. Every person who takes part in the show is responsible for knowledge of and is subject to The Utah Wild Horse & Burro Festival show rules. The Festival Committee will decide problems involving policy and questions arising at the show, not specifically covered by the rules below. Their decision is final.

Goal

The primary goal of the horse show is to learn and have fun. Another goal is to give each contestant the opportunity to demonstrate what a wild horse can accomplish when given proper care and training. **This is a wild horse, burro and mule show requiring all animals to have a US BLM Freeze Mark and proof of Certificate of Title or Adoption Papers.**

Liability

All entries are accepted with the understanding that the Utah Wild Horse & Burro Festival Show Committee, Salt Lake County, agents, and facility are not responsible for any loss, damage or injury to any animal exhibited or to any article of any kind. All animals shall be under the control and the risk of the exhibitor, who will be responsible for any loss, damage or injury to any person, animal or property occasions by him, his agents or employees, or by an animal owned or exhibited by him, and shall indemnify the UWHBF against any and all loss, damages and liability thus occasional, including attorney fees, which may be incurred as a result thereof. The submitting of an entry form to the Show Secretary shall constitute an acceptance by each person signing same of the revisions herein set forth.

Refusal of Entrants

The show's management reserves the right to refuse, accept conditionally or to cancel any exhibitor's participation in the show.

Entrants in Class

Any class with less than two entries, may at the discretion of the Show Committee, be combined with another class or canceled. The exhibitors in the classes will be notified accordingly. Large classes may be divided and conducted in two separate classes with duplicate prizes. If classes are split, you must ride in the assigned section. NO CHANGES ALLOWED.

Unsportsmanlike Conduct

When an exhibitor and/or representative acting on behalf of the exhibitor is guilty of unsportsmanlike conduct, the Committee can suspend the rights of such exhibitor and/or representative from participating in future shows for such a period as judged appropriate; and the Committee can bar from participation in any future shows.

Disqualification

Any animal inhumanly doctored in any way, medically, mechanically or unfairly prepared or tampered with before entering the showing ring will be disqualified. If it is ascertained that any exhibitor has made any false statement in regard to any animal or article exhibited, or if any exhibitor shall attempt to interfere with the judges in the performance of their duties, he or she shall be excluded from competing or exhibiting. In case of any animal being disqualified, the winner of the next succeeding prize in the class shall take the prize that has been awarded to such disqualified animal and the lowest prize in the class shall go to the reserve winner.

Discipline

Exhibitors are warned that any act of discourtesy or disobedience to the officials of this show on the part of the owner, lessee, trainer, groom, rider or driver may disqualify the animal from further participation. The Committee reserves the right to remove an animal, owner, lessee, trainer, groom, rider or driver from the show without being liable for compensation or damages.

Stallions/Intact Jacks are allowed to participate in the show as long as their handler is 18 years or older. If at anytime the stallion or intact jack becomes disobedient, the Committee reserves the right to remove the animal and handler from the show without being liable for compensation or damages.

Paddock Area Conduct

There shall be no conduct in the paddock area, which disturbs or creates hazard to animals, riders and/or handlers. There will be no whips, noisemakers or other equipment, devices or objects allowed in the paddock area which might disturb or create a hazard to animals, riders or handlers in the area, except the show whip carried properly by the rider or handler.

Cruelty and/or Abuse

Cruelty to or abuse of an animal by any person at a recognized competition is forbidden and constitutes a violation and may result in expulsion from the show grounds. "Cruelty" and/or "Abuse" but are not limited thereto:

1. Excessive use of force on any animal in a stall, runway, schooling area, show ring or elsewhere on the competition grounds before or during a competition by any person.
2. Rapping the legs of an animal with butt end of a riding crop or other implement.
3. Use of any substance to induce temporary heat.
4. Manual polling with any object other than a bamboo pole.
5. Use of a wire or chain in conjunction with any schooling jump.
6. Use of electric device in schooling or showing.
7. Use of shackled (not to be construed as rubber or elastic exercising devices).
8. Showing an animal with raw or bleeding sores.

Revised 4/26/06

9. Use of explosives anywhere on the competition grounds, except in an exhibition or if required in class competitions.
10. Inhumane treatment of an animal in a stall, runway, schooling area, show ring or elsewhere on the competition grounds by any person.

Use of Whips

No item may be used inside or outside the ring while showing an equine except one whip per handler. If whips are allowed, they must be no longer than 6" including the snapper or lash except in the lunge line classes. No appendages of any kind are permitted except In-Hand classes where a small empty paper or small empty plastic bag or ribbons may be attached to the whip or used separately.

Two-Minute Gate Rule

Due to a full schedule of classes, the two (2) minute limit for gates will be strictly enforced. Exhibitors are cautioned against entering the same animal/rider in successive classes. The gate will close two (2) minutes after the first animal enters the ring, or in case with large classes taking more than two minutes, at the completion or final animal in the continuous string of equines/burros. It is the responsibility of the exhibitor to be sure that his/her animal is at the gate on time. Class calls must be considered a courtesy only. NO protests will be upheld on the basis of a public address (PA) system malfunction. Gate hold will be granted at the discretion of the gate steward and will not exceed five (5) minutes.

Withdrawal from Classes

As a courtesy to the Gate steward, Announcer and Show Office, exhibitors are requested to notify the Show Office when it is necessary to withdraw from an entered class. This courtesy will enable the show to run more efficiently. Your consideration will be greatly appreciated by the staff.

Admission to the Ring

No person will be permitted to enter the ring except participants in the class, judge, their assistants, and show officials. Attendants and grooms may enter the ring only when summoned by order of the judge.

Artificial Markings and Appliances

1. Any change of color or markings other than mane, tail or hoof is prohibited. Only clear grooming materials are allowed on the hide and hair. Materials may be used to remove stains.
2. All artificial appliances other than those permitted in division rules are prohibited. Bandages, tail sets, chains (unless required or allowed) or other training devices are prohibited in the ring.
3. General Equipment Rule: Ornate silver equipment or any other fancy equipment will not count over clean workable equipment.

Rider Categories

- YOUTH – An individual who has not reached his/her 18th birthday as of January 1st of the current year – 17 yrs old or under.

- NOVICE – Open to exhibitors who have not engaged in any of the following activities which would make him/her a professional:
    1. Accepts remuneration for riding, schooling, driving, showing in halter, training, or conducting clinics or seminars.
    2. Accepts remuneration for instructions in equitation or horse training.
    3. Has won prizes or money in excess of $2,000.
    4. Has won a high point award in any of the Tri-State Shows.

- ADULT – Open to exhibitors over 18 years of age or older regardless of the ribbons, remuneration previously won, or professional status. There is no qualification required for the rider, driver or handler.

Animal Categories

For Horse Show purposes, any wild horse, burro or mule is considered to be one year on the first day of January following the actual date of foaling. The age of the animal on January 1 shall be maintained throughout the entire calendar year. No animal is allowed to be shown under saddle if less than 2 years of age.

- GREEN HORSE – an animal that is 5 years of age or younger or has been adopted less than 36 months (must show proof of age and adoption date). An animal may remain in this category for a maximum of 3 years. ***A Green Horse may not cross enter into any other animal category.***

- IN-HAND ANIMALS – An equine not yet ready to show under saddle or harness. ***In-Hand animals may not enter in any class under saddle***.

- BURROS & MULES – Burros and mules will compete in all classes with equines unless a sufficient number justifies separate classes.

Point System:

Awards will be calculated on a sliding 6 point scale. For example: 1st-6pts, 2nd-5pts, 3rd-4pts, 4th-3pts, 5th-2pts, and 6th-1pt. If there are three people in a class, the points are as follows: 1st-3pts, 2nd-2pts, and 3rd-1pt.

Safety Helmets

During all over-fence and timed-event classes and warm up exercises, it is strongly recommended that all riders wear a properly fitted headgear with a fastened chin harness. In all other judged and timed classes, the use of protective headgear is acceptable, recommended and the optional choice of the exhibitor. ASTM/SEI helmets are recommended. It is the responsibility of the rider and the parent, guardian or trainer to ensure that the headgear worn complies with appropriate safety standards for protective headgear intended for equestrians' use and that the headgear is properly fitted and in good condition.

Horse Program and the Festival Committee are not responsible for ensuring that the headgear worn complies with safety standards and make no representation or warranty, expressed or implied, about any protective headgear and cautions riders that death or serious injury may result despite wearing such headgear, because all equestrian sports involve inherently dangerous risks and no helmet can protect against all possible injuries.

Showmanship

The showmanship class is judged on an exhibitor's ability to execute practical and basic halter class maneuvers from the ground. The class should always be judged with this in mind, giving credit to the exhibitor who can correctly perform each maneuver of the total pattern or run. Judges should refrain from conducting the class routine in any manner that attempts to trick, confuse or mislead exhibitors. **In showmanship at halter, conformation of the horse is not judged.**

Attire. Exhibitors should be neat, clean, and well groomed. Handler should wear appropriate English or Western Attire. Chaps and spurs are not permitted in showmanship.

Equipment. Use a clean halter that is adjusted to fit the horse. The halter should fit well on the horse's head to maximize response to subtle halter cues. Silver halters shall not count over a nice, clean, well-fitted halter.

Lead straps are often attached to a chain and snap. The lead strap may be snapped below the jaw in the center ring of halter or the chain can be run under the horse's chin and snapped to the upper or lower halter ring on the right side of the horse's head.

Horse Fitting and Grooming

1. The horse should be clean and well groomed. Manner of fitting for mane and tail may vary according to recognized practices for particular breed of horse.
2. A well-groomed horse that is clean, properly trimmed and conditioned does have a justified advantage in showmanship at halter. Underweight or thin horses may be penalized.

Method of Showing

1. Walk, trot, turn, stop, back and pose the horse as shown in the posted pattern or by the judge's instructions.
2. The horse is always lead from the left side. The exhibitor's right hand is held closest to the halter, with the distance being highly dependent upon the mannerisms of the horse, the size of both the horse and the exhibitor and the breed standards. The excess amount of lead is folded or loosely coiled in the left hand and held about waist high. Never wrap the excess lead around the hand or make a coil so small that a sudden jerk could cause the lead to wrap around the hand.
3. At both the walk and trot, the exhibitor's shoulder should be about even with the horse's throatlatch. In this position, the horse is beside the exhibitor, allowing the judge a clear view of the horse's travel. Movement at both gaits should be brisk and sharp, as opposed to slow and dull. Speed of travel is somewhat related to straightness of travel, and the slower a horse moves, the greater chance for deviation from a straight line of movement.
4. When leading to or from a judge or ringmaster, stops and turns are very important. The exhibitor should always allow plenty of space between the horse and the judge. Stops should be executed squarely and without hesitation, as the stop is an important maneuver preceding a correct turn or reverse of direction.
5. Turns of more than 90 degrees should always be executed to the right. Pushing the horse away rather than pulling the horse around will allow more distance between the horses and the exhibitor's feet. In addition, turning to the right allows the horse to use the right hind foot as a pivot point. The horse can then cross the left front foot over the right front to execute a very uniform and smooth turn. This results in the horse remaining in essentially the same tracks after the turn is completed and provides the judge a good view as the horse is walked or trotted away.
6. Immediately following a turn or reverse of direction, the exhibitor should look back to make sure the horse is lined up with the judge. Class routines may require walking or trotting back into the lineup of horses. The exhibitor should lead all the way through the line, stop, reverse, and then lead into the line to set up. If asked to change positions in the line, back the horse out of the line and approach the new position from behind.
7. Pose or set up the horse with its feet set according to its type or breed. Stock horse breeds stand square. Move the horse's feet by pushing or pulling on the lead strap as necessary with the right hand. Touching the horse's body with a hand or foot to change the horse's position is penalized.
8. Once set up, the horse should be presented in such a way as to not distract the judge's attention from the horse. The exhibitor stands on the opposite side of the horse when the judge is toward the front and on the same side as the judge when the judge is toward the rear of the horse. Most judges for youth exhibitors prefer this method of presentation.

9. For safety reasons, at no time should an exhibitor stop and stand directly in front of the horse.
10. The primary objective is to show the horse. Exhibitors should stand where they can see the judge and the judge can see them, but without obstructing the judge's view of the horse. The basic position of the exhibitor should allow constant observation of the horse's position and also permit observation of the judge.
11. Looking at the judge keeps an exhibitor from continually observing the horse and keeping the horse set properly. Exhibitors should maintain eye contact with the horse. It is acceptable to glance at the judge from time to time, but an exhibitor should not do this continuously.
12. Exhibitors should keep their proper position in line and allow reasonable space (at least 5 feet) between horses on either side. Keep horses from making contact with a competitor or encroaching on space rightfully belonging to another exhibitor.

Some Showmanship Class Faults

1. Allowing the horse to remain out of position.
2. Standing directly in front of the horse.
3. Kicking the horse's feet to move them.
4. Failure of the horse to lead properly.
5. Failure to stop before turning when showing at a walk or trot.
6. Failure to back.
7. Loud voice commands to the horse or other unnecessary actions.
8. Picking up the horse's feet for positioning purposes.
9. Tracking crooked.
10. Posing incorrectly.

Class Routine

1. Exhibitors may enter the arena single file, moving around the arena counter-clockwise before lining up at the judge's instruction. Once in line, each exhibitor will perform individually.
2. At many shows, exhibitors will be asked to enter the arena individually and work a pattern designed by the judge.
3. Regardless of the manner used, judges should draw patterns clearly and make instructions that are easily understood by exhibitors.
4. Where patterns are posted, such instructions should be available for the exhibitor to review prior to the start of this class (at least 1 hour before, if possible).

Lunge Line

This class is for horses of any age not yet ready to show under saddle. Grooming, fitness, willing response to handler and general way of moving will be considered by the judge. A maximum line of 30 feet is required. There is a 3-minute time limit with right and left circles required. A whip is optional but never in contact with the horse or automatic disqualification. Handler should wear appropriate English or Western attire.

Equine Citizenship

This class is designed to encourage all adopters and owners of wild horses, mules and burros to develop safe and happy relationships with their adoptees: Socialization, ground manners, overall comfort on both equine and human's part and training to perform specific everyday tasks for caring for the animal. Equine Citizenship is for everybody – not just "show horses".

There are two classes of Equine Citizenship: NEWBIES (2 & under OR Adopted 2 yrs or less) and ALL OTHERS (which is just what it says!!!!).

A good Equine Citizen should: Stand within safe and respectful distance, on slack line; Allow judge to pet face and sides of body; Allow judge or handler to pick-up front & hind feet; Allow handler to show mouth and teeth to judge; Walk on lead line without pushiness or shying; Lower head for haltering or bridling; Back-up handler standing at side of animal; Back-up handler standing in front of animal; Back through an open gate; Load into trailer (stock trailer or slant load for newbie's; others can be asked to use either this type or the narrower straight load); Yield hindquarters; Yield head and shoulder to right or left to lead into a turn; Allow flag and/or rope to gently touch body and feet; OPTIONAL (Bonus Points): Perform one "trick" just for fun: Handler's Choice of One "Trick" such as Bow Down, Smile, Nod Head, Pick up hat off the ground, Count, etc…

This very popular class has developed this year into a certification program, similar to the American Kennel Club's Canine Good Citizen Program.

The Equine Citizenship class is designed to reward mustang and burro owners who have taken the time to train their adoptees to be safe and manageable both at home and out in public. All animals who pass this class will receive a certificate from the BLM.

English Performance Classes: Attire and Equipment

Suitability for dressage, hunter under saddle, hunter equitation, hunter hack, and beginner crossbar jumping:

Attire. See the section entitled Safety Helmets. Clothing must be clean and neat. The rider must wear a coat, boots, breeches, and hunting cap. The coat may be any tweed or melton (conservative, washable jackets in season) acceptable for hunting. Breeches or Jodhpur pants should buff, brown or white pants are required when a scarlet coat is worn. Boots may be black or brown. Tops may be worn only with scarlet coat. A black, dark blue or brown derby is required. Spurs of the unrowelled type, gloves, crops and bats are optional. Gloves are preferred in the equitation class and should be heavy wash-leather or brown leather.

Equipment. Clean English forward, hunting or dressage saddles are allowed. Saddles may have a suede seat and/or suede inserts on the skirts. Regulation snaffle, Pelham

or full bridle, with a cavesson noseband is required. *Smooth round, slow twist, corkscrew, single twisted wire, double twisted wire and straight bar or solid mouthpieces with maximum 1 ½ inch high ports are allowed.* Breastplates are optional. Martingales are not allowed in flat classes or hunter hack. Draw reins, hackamores, boots or bandages are all prohibited (exception: boots or leg wraps are legal in open jumping).

Proper show attire & tack is not mandatory, however, points may be deducted for improper show attire & tack.

Riding Horse – Suitability for Dressage

Suitability for Dressage is open to horses that have not competed in any test above the first level. The horses are to be shown at a walk, trot and canter both ways of the ring. This class is to be judged on the horse's potential to become a Dressage mount.

The Gaits

1. The walk is a marching pace in which the footfalls of the horse's feet follow one another in "four time", well marked and maintained in all work at the walk.
2. The trot is a pace of "two time" on alternate diagonal legs (near left fore and right hind leg and vice versa), separated by a moment of suspension.
3. The canter is a pace of "three time", where as canter to the right, for instance, the footfalls follow one another as follows: left hind, left diagonal (simultaneously left fore and right hind) right fore, followed by a moment of suspension with all four feet in the air before the next stride begins.

(In all the horse's work, the horse must be on the bit. A horse is said to be on the bit when the neck is more or less raised and arched, showing clear self-carriage. He should accept the bridle with a light and soft contact with no resistance to the rider. The head should be in a vertical position with the pole at the highest point of the neck to show suppleness.)

Suitability for Dressage Test

At Letter:	Exercise:
1. A	Enter at a walk
2. X	Rising trot (posting)
3. C	Turn right, continue rising trot
4. B	Circle 20 meters
5. between A+K	Canter, right lead
6. B	Working trot
7. A	Down the center line
8. C	Turn left
9. H X F	Change direction sitting trot
10. A	Down center line
11. X	Halt, salute, leave arena on loose rein

Hunter Equitation

Hunter equitation is an evaluation based on the ability of a rider to perform various maneuvers in harmony with his/her horse. The communication between horse and rider through subtle cues and aids should not be obvious. Equitation is judged on the rider and his/her effect on the horse.

Hunter Hack

Animals will be required to jump two fences, two feet to two feet nine inches in height. Jumps do not need to be set on a line but if they are they must be set 36, 48, or 60 feet apart or in increments of 12 feet but no less than 36 feet.

Beginner Crossbar Jumping

Jumping course participants will have to jump a set course of a maximum of 6 jumps not exceeding 18 inches each. In case of a tie there will be a jump off with jumps being raised at a rate of 3 inches to a maximum of 2feet 3 inches. In case of another tie the winner will be chosen at the discretion of the judge based on equitation.

Western Performance Classes: Attire and Equipment

Western pleasure, western equitation, western showmanship, trail, reining, western riding:

Attire. Riders shall wear western hat (or approved helmet), long sleeve shirts and western boots. *Western boots shall include typical cowboy boots and lace-up ropers. All other footwear is prohibited.* The use of spurs and chaps shall be optional. Clothing should be neat and clean.

Equipment. Horses shall be shown in a stock saddle that fits the rider. Silver equipment will not count over good, clean, working equipment. Horses may be ridden with snaffle, curb, spade, half-breed bit or with braided rawhide, leather or rope hackamore (bosal). Two-hand or one-hand is allowed as long as properly used, see example. If a romal is used, fingers between reins are not permitted.

Curb bits must have shanks that do not exceed 8 ½ inches (total length of upper and lower shank) and the port must be no higher than 3 ½ inches.

Curb chains or straps must be at least ½ inch in width and must lie flat against the horse's chin. No wire curbs are permitted, regardless of the amount of padding or tape. Absolutely no iron will be permitted under jaws. Mechanical hackamores are prohibited. Bosals or nosebands are not permitted with a bit. Gag bits, tie downs, martingales and draw reins are prohibited.

Protective boots and leg wraps are not allowed in halter, western pleasure, western riding and trail.

Proper show attire & tack is not mandatory, however, points may be deducted for improper show attire & tack.

Trail in Hand

This class is for horses, burros and mules of any age not yet ready to show under saddle. Horses and burros will be judged on performance of animal, responsiveness to handler and attitude at typical trail obstacles (gate, bridge, water, mailbox, ground poles, slicker, cones, etc.) as well as general fitness and grooming. Animals are to be shown at a walk and jog somewhere during the course. Failure to follow exact pattern will be cause for disqualification. Failure to complete obstacles will mean penalty. Western or English attire approved. Course will include a minimum of 6 and a maximum of 10 obstacles. A maximum of 3 attempts per obstacle with unnecessary delays and a maximum time limit of 30 seconds per obstacle will be allowed. Pattern will be posted day of competition.

Trail

To be judged on performance of animal over obstacles, with emphasis on manners, response to rider and attitude. Credit will be given to those horses negotiating obstacles cleanly, smoothly and alertly with style in prompt response. Horses will be penalized for performing with an artificial or mechanical appearance. Also, for touches and knock downs of any elements of the course and for unnecessary delay in approaching the obstacles. Extreme variation of gait is to be penalized. The course will be designed to require each horse to demonstrate walk, trot and lope somewhere between the obstacles as part of the working course. Enough space will be provided for the judge to evaluate the gaits. A horse with a major fault on the course, knock downs, etc., should not place ahead of a horse that worked the obstacles cleanly. Failure to follow exact pattern will be cause for disqualification. Failure to complete obstacles will mean penalty. Obstacles include but are not limited to: side pass; wooden bridge; opening and closing of gate; water hazard; ride over at walk, jog or lope; carry an object from one side of the arena to the other; remove or replace material from a mailbox; hobble or ground tie animal (at contestants option); back through; backing around obstacles; 360 degree turn inside a box; put on or remove slicker. Western or English attire approved. Course will include a minimum of 6 and a maximum of 10 obstacles. A maximum of 3 attempts per obstacle with unnecessary delays and a maximum time limit of 30 seconds per obstacle will be allowed. Pattern will be posted day of competition.

Western Equitation

The Western Equitation class is designed to evaluate the rider's ability to execute, in concert with their horse, pre-set maneuvers prescribed by the judge with precision and smoothness while exhibiting poise and confidence and maintaining a balanced functional and fundamentally correct body position. The ideal horsemanship pattern is extremely precise with the rider and horse working in complete unison executing each maneuver with subtle aides and cues. Equitation is judged on the rider and his/her effect on the horse. Prescribed patterns and routine will be posted.

Western Pleasure

This class recognizes a horse for functional correctness, quality of movement, attitude and manners.

1. Horses are shown at a walk, jog and lope on a reasonably loose rein without undue restraint. Horses must work both ways of the ring, at all three gaits, to demonstrate their ability with different leads and transitions. Riders may be asked to extend the jog at the judge's discretion. Horses may be required to reverse at the walk or jog and to go from any gait to another gait at the discretion of the judge. For safety of the exhibitors, a reverse at a lope or extended jog shall not be called.
2. Horses should back easily and stand quietly. The judge may ask that only finalists be backed.
3. Horses are to be reversed to the center of the arena.
4. Large numbers in this class may require qualification heats to accommodate all horses. Arena size will dictate heat size. After each heat, all horses should be brought to the center with the finalists identified.
5. Any portion of a class or heat may be placed on the rail for extra work by the judge at any time.
6. At no time shall a fault-out system that results in exhibitors being eliminated individually be used. A positive approach should be used, with winners or finalists being announced and the remainder of the class being dismissed from the arena as a group. Individual horses should not be pulled off the rail while the class is being judged.
7. Entries shall be penalized for being on wrong leads, but not necessarily disqualified. Excessive speed and breaking gait are to be penalized. Horses with a low head carriage and/or behind the vertical and/or a sullen, lethargic, emaciated, drawn or tired look will be penalized.
8. The class will be judged on the performance and condition of the horse at the discretion of the judge.

Team Cattle Sorting

Cattle are numbered consecutively. A hold back line is required a specific feet from arena rail. Three members per team. There is a 90-second time limit. The objective is to sort each individual number one at a time without allowing the others to cross the marked line. Team members must hold all cattle except number being sorted behind the line or be disqualified. Example: If steward calls number 3, sorter will begin with 3, 4, 5, 6, 7, 8, 9, 0, 1, 2 working to get all cattle sorted within time limit. Each team will get 3 runs and the team with the highest total after 3 runs will be the winner.

Kids Lead Line

Kids 6 and under are eligible to participate in this class. Adult handler must remain in control of equine at all times.

Costume Class

AT THE WALK ONLY; Children 12 and Under must be accompanied by Adult. Gate Keeper reserves the right to check all equipment prior to entering into the arena.

Timed Event Classes

Pole bending, barrel racing, stake race, flag race, keyhole, and team cattle sorting:

Attire. Exactly like judged classes. *Long sleeve shirts and western boots are required*. Western hat is optional and if worn, should be affixed in a manner to keep it from coming off the rider. Caps are prohibited.

Equipment. Western-type equipment must be used. The use of a mechanical hackamore, gag bit or other type of bridle is the contestant's choice. However, the officials or judge may require removal or alteration of equipment considered severe, dangerous or inhumane. Contestants may use tie downs.

Driving Division

Harness Classes

Equine is shown in a harness or simple surcingle without a cart or wagon. Handler walks behind the equine directing the equine as if equine was pulling a cart/wagon. As driving can be used for starting an equine and later to train to a cart the equine can be shown "In-Hand" if the equine is not ridden in any classes or can be shown in riding classes but can not enter into any "In-Hand" Classes.

Trail – Harness Driving

Trail driving uses the same rules as In-Hand trail, only the animal is in harness or simple driving surcingle, and is driven from behind. The animal does not have to pull a cart. An animal being driven by a handler who walks behind is fine.

Driving – Walk and Trot

To be judged on performance and overall presentation at a walk, trot and extended trot both ways of the ring. Animals will be asked to back up. Personal appointments shall be neat, clean and in good working order. Snaffle bit with over check or Liverpool bit with crooper is permitted. Animals will be penalized for head tossing, breaking stride, going sideways and excessive tail swishing.

Rigs of the four wheeled or two wheeled variety permissible. Rigs should be of standard pleasure type whether of four or two-wheeled variety; however, working or draft type is acceptable if animal is suited by conformation.

Pole – Harness Driving

Obstacle driving will be judged on the performance of the animal through a coarse set up on the arena. The animal is judged on the ease with which it maneuvers through the obstacles. Knocking over an obstacle, breaking gait, or disobedience are to be considered penalties. This is a timed event.

Show Rules for Burros & Mules:

Showmanship Classes

Blind Bridles are not allowed. However, an open headstall with a bit or a halter/bit combination is allowed. Classes will be judged the same as wild horses with the following exception. Jacks 12 months of age & over must be shown with chin lead over, under or through the mouth or with a bit type halter. Jack must have two handlers who will remain at the head of the jack.

Trail

Burros will be shown separately using the same basic principles and guidelines as for wild horses. Mules will be shown with wild horses until entries warrant a separate division.

Driving

A pleasure driving class in which entries are judged primarily on the suitability of the burro to provide a pleasant drive. Drivers should dress conservatively according to the style of present day. Western or English is acceptable ladies wearing a skirt should wear a lap robe. Gloves and a hat are required in all classes.

Showmanship Halter-Youth

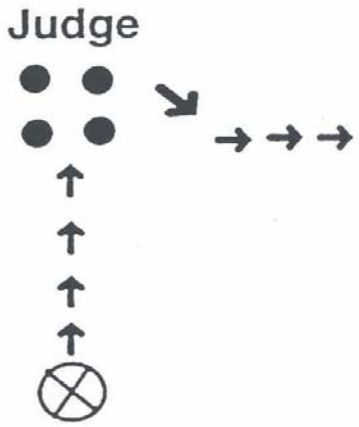

1. Start at marker. Trot toward judge.
2. Stop in front of judge and set up horse for inspetion by judge.
3. When dismissed by judge turn 270° to the right and walk to line-up as directed by ring steward.

Showmanship Halter-Adult

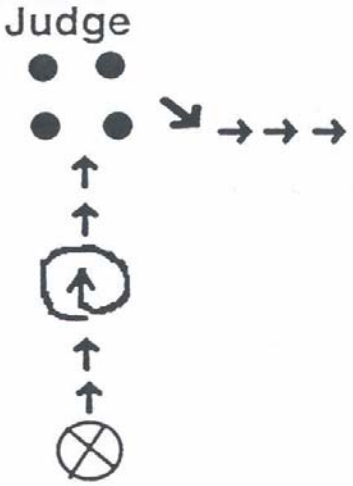

1. Start at marker. Trot toward judge.
2. Half-way to judge, stop and turn 360° to the right and then continue to trot to the judge.
3. Stop and set up horse for inspection by judge.
4. When dismissed by judge, turn 90° to the right and walk to line up as directed by ring steward.

TRAIL

YOUTH

CLASS MAY HAVE SOME OR ALL OBSTACLES IN SHOW EVENT

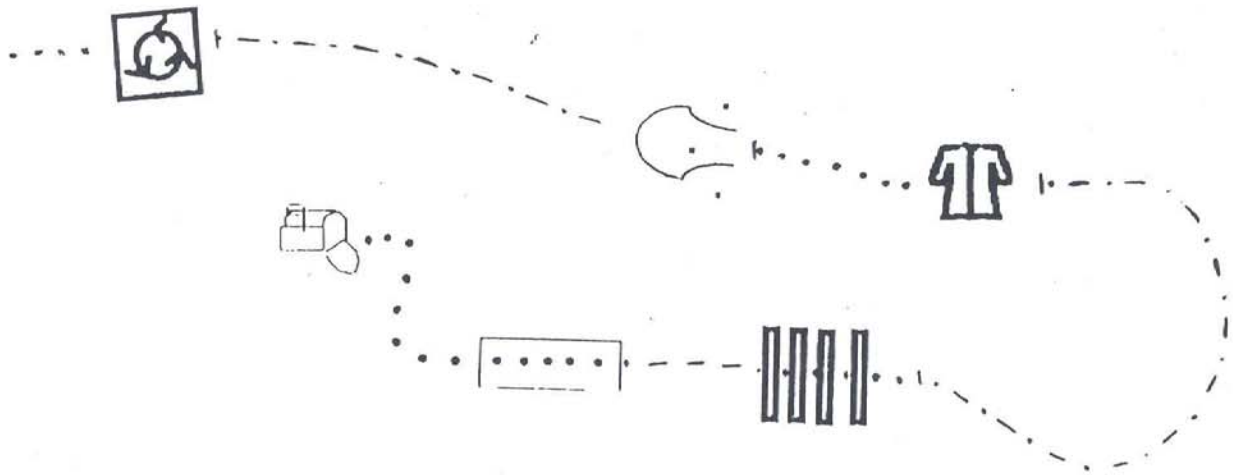

1. Open Mailbox
2. Walk over bridge
3. Trot to logs
4. Walk over logs and stop
5. Pick up left lead to slicker obstacle, and stop
6. Place slicker on lap, and return it
7. Walk to next obstacle and stop
8. Back through cones as designated in pattern
9. Pick up right lead to next obstacle and stop
10. Perform 360 degree turn inside of box
11. Walk, and stop at end of pattern, and wait until judges dismissal

TRAIL

Novice Adult

CLASS MAY HAVE SOME OR ALL OBSTACLES IN SHOW EVENT

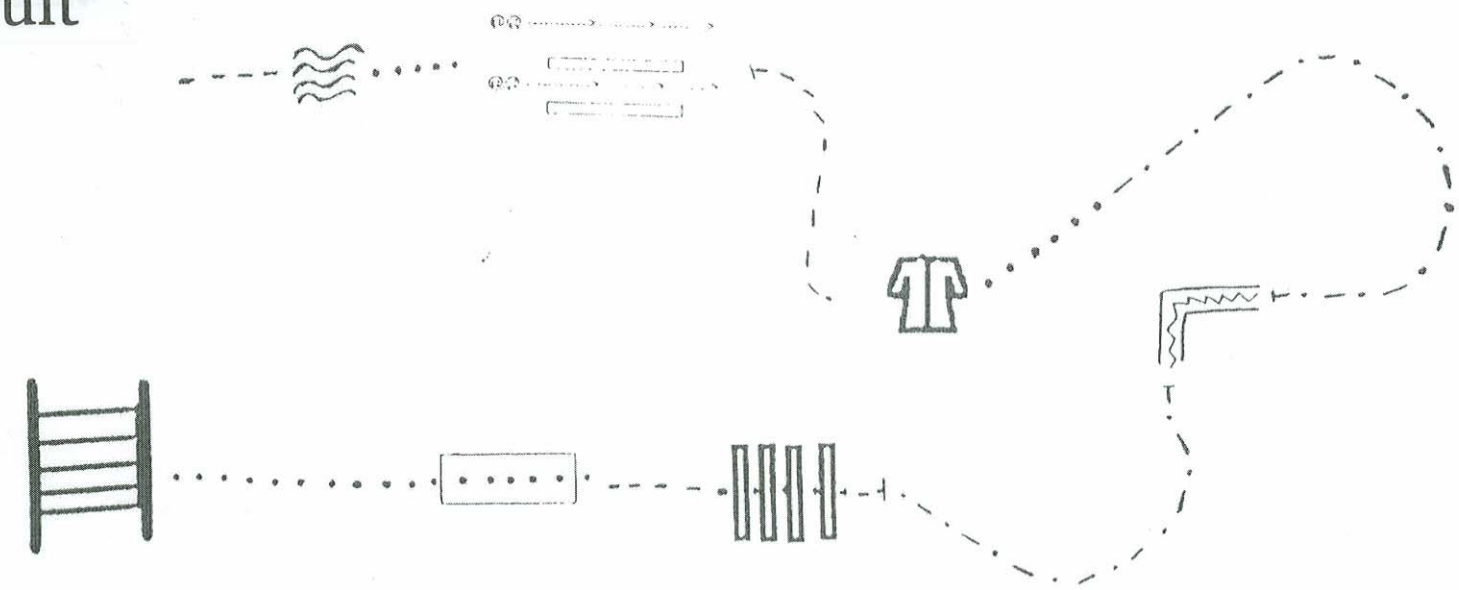

1. Open Mailbox
2. Walk over bridge
3. Trot to logs
4. Walk over logs and stop
5. Pick up left lead "L" shaped obstacle, and stop
6. Back through "L" and stop
7. Pick up left lead and break to walk before slicker
8. Place slicker on lap and return it
9. Trot to side pass obstacle and stop
10. Side pass over logs both directions
11. Walk to and continue through water obstacle
12. Trot and stop at end of pattern and wait until judges' dismissal

Western Equitation

Youth
Novice
Adult

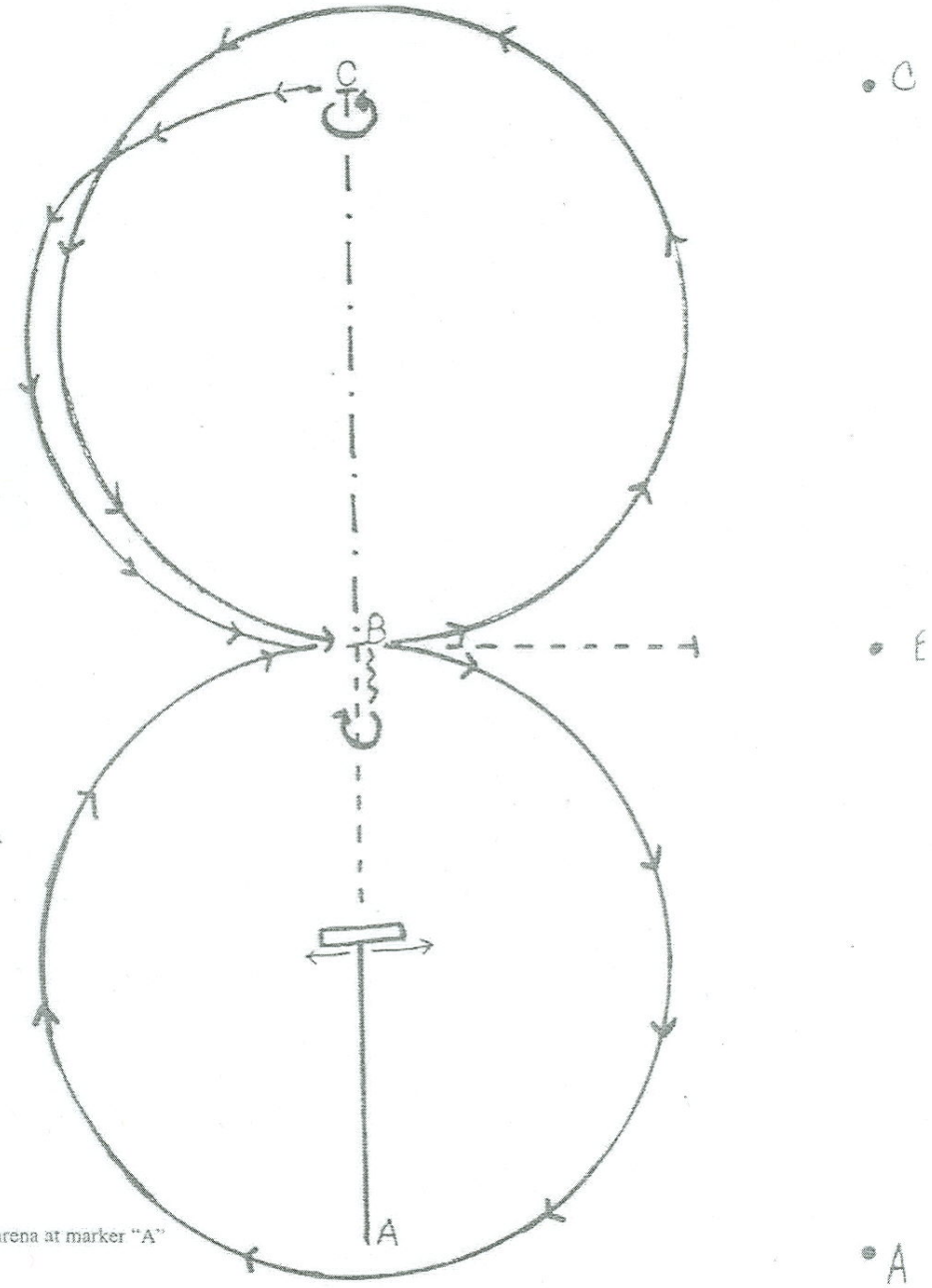

1. Line up in center of arena at marker "A"
2. Walk to log
3. Side pass over log
4. Trot to point "B" and stop
5. Back up 5 steps
6. 360 degree turn on haunches to the right
7. Lope on right lead to marker "C" and stop
8. 450 degree turn on haunches to the left
9. Proceed through figure eight's
10. At center of last figure eight, break to a trot, and stop in front of judge

REINING PATTERN

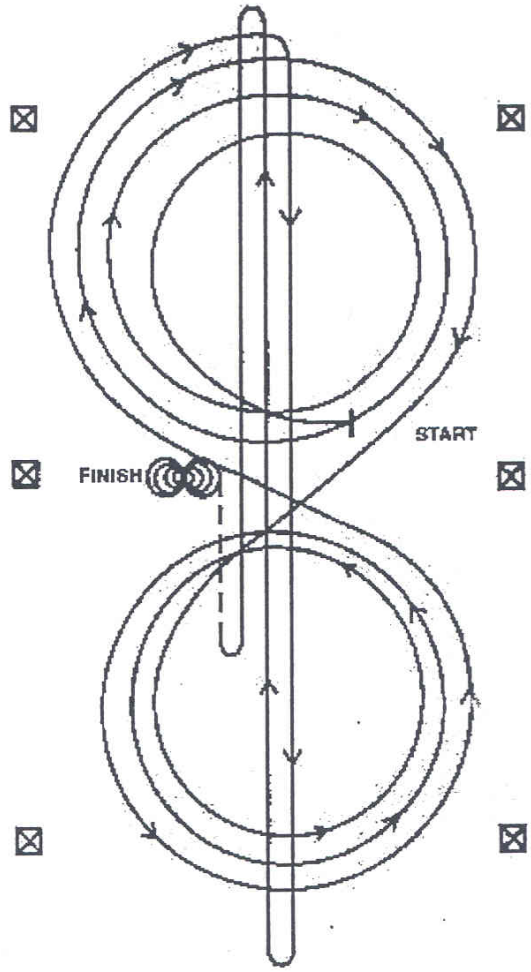

<u>Horse must walk or stop prior to starting pattern.</u>

Beginning at the center of the arena facing the left wall or fence.

1. Beginning on the right lead, complete three circles to the right: the first circle small and slow; the next two circles large and fast. Change leads at the center of the arena.
2. Complete three circles to the left: the first circle small and slow; the next two circles large and fast. Change leads at the center of the arena.
3. Continue around previous circle to the right. At the top of the circle, run down the middle to the far end of the arena past the end marker and do a right rollback - no hesitation.
4. Run up the middle to the opposite end of the arena past the end marker and do a left rollback - no hesitation.
5. Run past the center marker and do a sliding stop. Back up to the center of the arena or at least ten feet (3 meters). Hesitate.
6. Complete four spins to the right.
7. Complete four spins to the left. Hesitate to demonstrate the completion of the pattern.

Rider may drop bridle to the designated judge.

POLE BENDING

A timed event

1. Each contestant will begin from a running start, and time shall begin and end as the horse's nose crosses the line. A clearly visible starting line must be provided. An electric timer or at least two watches shall be used, with the time indicated by the electric timer or the average time of the watches used by official timers to be the official time.
2. The pole-bending pattern is to be run around six poles. Each pole is to be 21 feet apart, and the pole is to be 21 feet from the starting line. Poles shall be set on top of the ground, six feet in height, with no base more than 14 inches in diameter.
3. A horse may start either to the right or to the left of the first pole and then run the remainder of the pattern accordingly.
4. Knocking over a pole shall carry a five second penalty. Failure to follow the course shall cause disqualification. A contestant may touch a pole with his or her hand in pole bending.

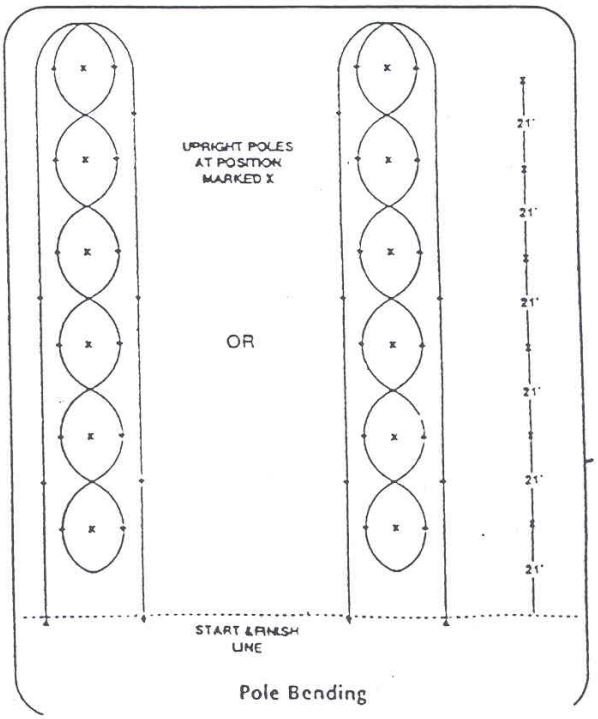

Pole Bending

Purpose

Improves reining ability, coordination of aids, and sense of timing, horse/rider communication.

Stake Race

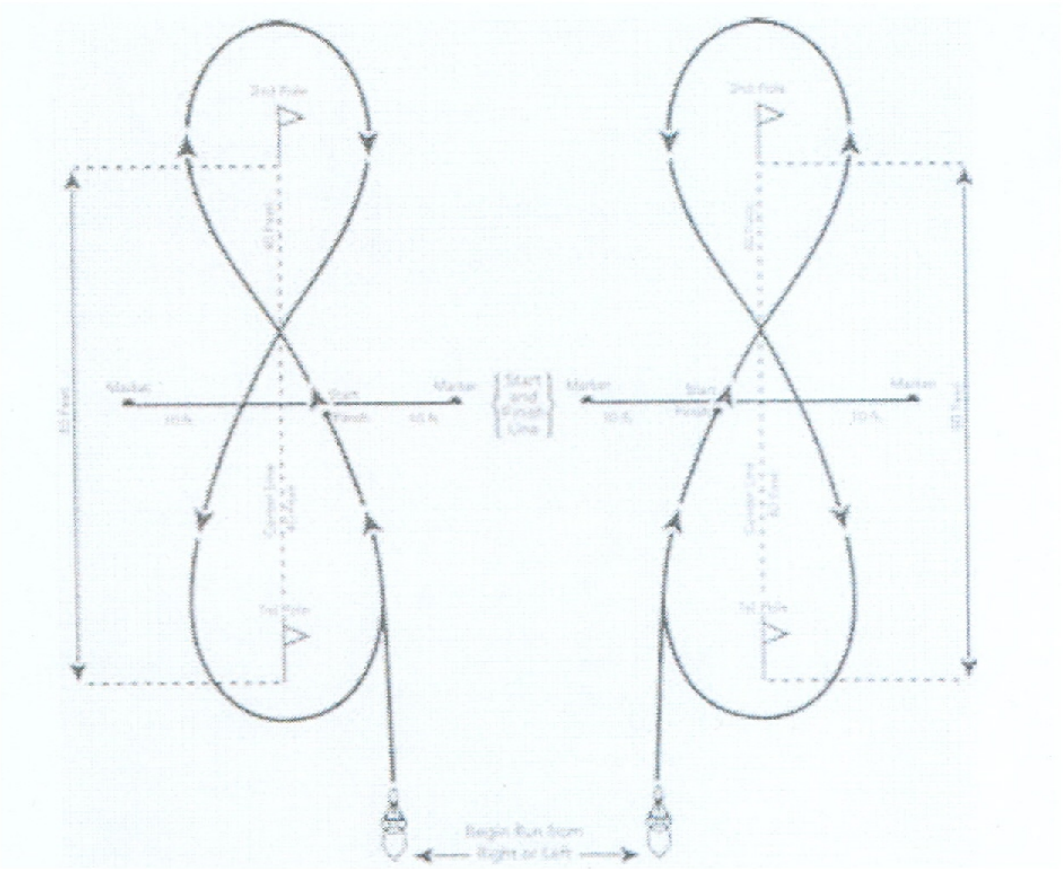

1. Course consists of 2 poles and 2 cone markers.
2. Start/finish line is 40 feet wide and marked by the 2 cones (20 feet on each side of centerline).
3. First and second poles are placed 40 feet from centerline (making them 80 feet apart).
4. If pole(s) are knocked over, a 5-second penalty will be added for each pole knocked over.
5. Contestant can run the S-pattern or figure eight pattern.
6. Failure to complete the pattern will result in a no time.

PURPOSE

Teaches precision and accuracy at the designated gait; improves reining ability and ability to maintain balance in tight circles.

BARREL RACE

A timed event

1. The course must be measured exactly. If the course is too large for the availed space, then the pattern should be reduced by 5 yards at a time until the pattern fits the arena. Remember to set your course so that a horse may have ample room to turn and stop.
2. At a signal from the starter or timer, the contestant will go to the barrel number 1 turning to the right of this barrel, complete a 360 degree turn, then on to barrel number 2, this time turning to the left with another 360 degree turn. At barrel number 3 the same passage to the left and 360 degree turn is accomplished.
3. Timing shall begin as soon as the horse's nose reached the starting line and will be stopped when the horse's nose passes over the finish line.
4. For each barrel knocked over, a five-second penalty will be allotted. Failure to follow the course shall cause disqualification. A contestant may touch a barrel with his or her hands in barrel racing.

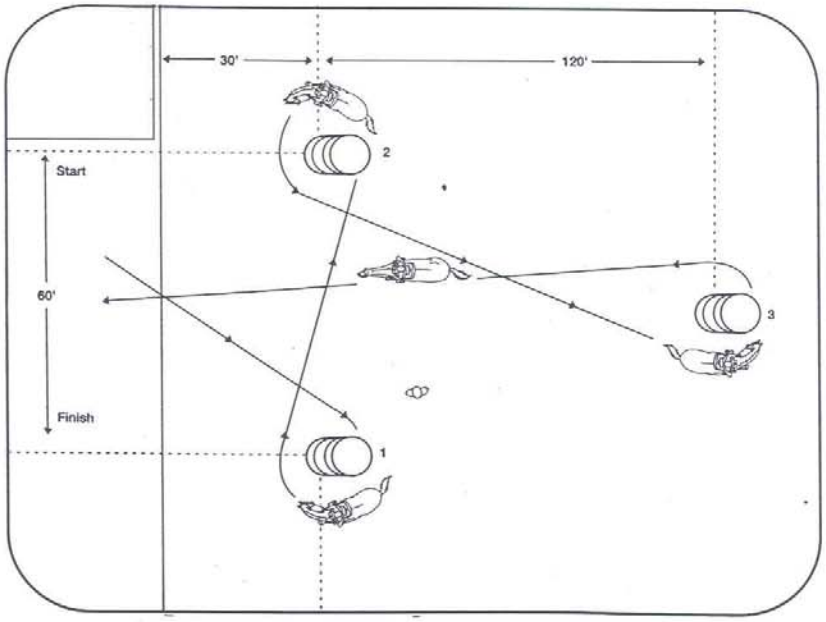

PURPOSE

The cloverleaf pattern is designed to test the speed and maneuverability of the horse.

Flag Race

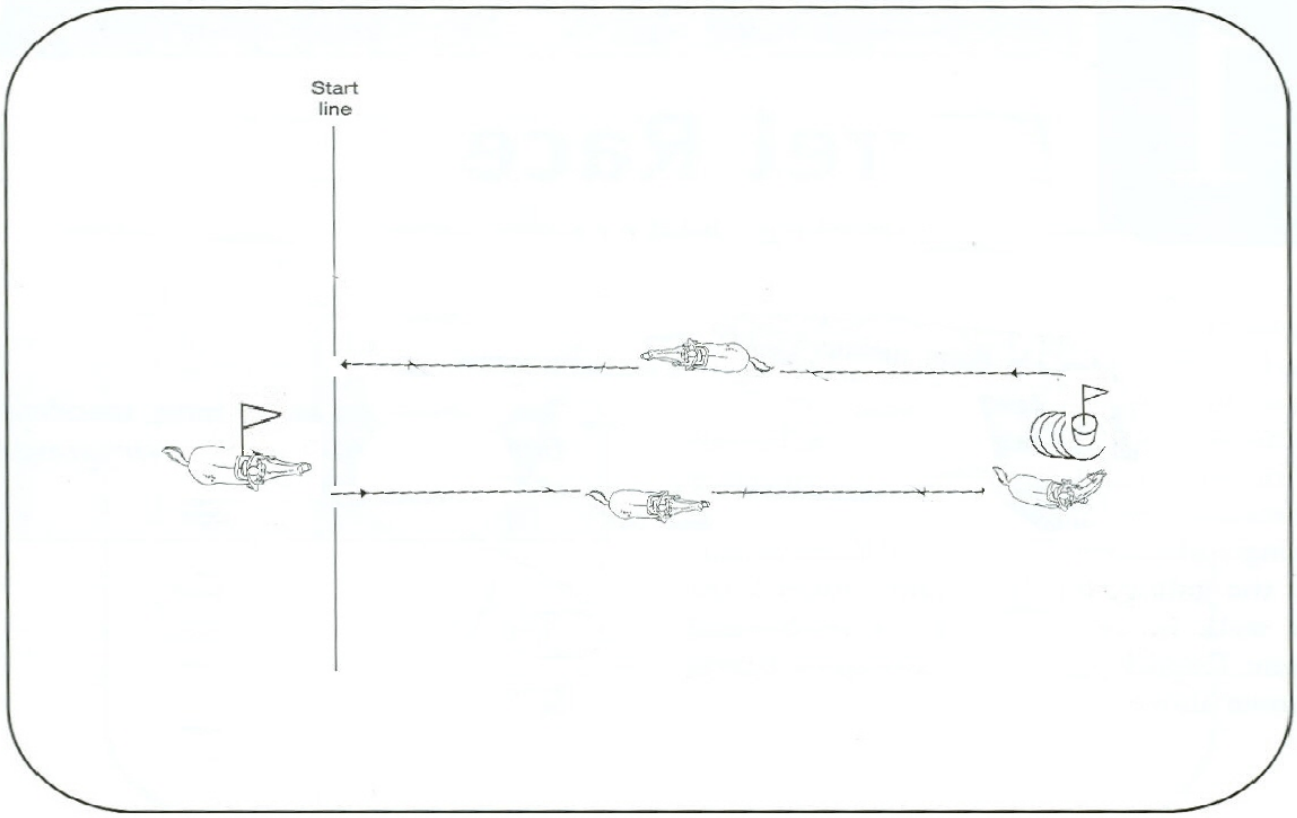

1. There will be one flag stuck in a bucket of sand filled one inch from the top and placed on top of a barrel at the end of the arena.
2. Rider will receive another flag from the gate keeper at the gate.
3. Rider must enter the arena, go around the barrel (in either direction), swap the flags and leave the arena.
4. Flags must be swapped, swapped flag must remain in the bucket on the barrel and rider must exit the arena with the other flag.
5. Flag is to be either handed to or dropped near the gate keeper.
6. Rider will be disqualified for knocking over the barrel and/or bucket or for striking the horse with the flag.

PURPOSE

Improves reining, agility, hand-eye coordination, and balance

KEYHOLE

A timed event

1. A keyhole will be marked with lime or sawdust according to the diagram included with this event. Four (4) pole markers will be used to mark the entrance.
2. Rider at starting signal, crosses the start/finish line, races into the keyhole, turns horse 180 degrees, and rides aback to the start/finish line.
3. Knocking down a marker, stepping on, or over any lines of the keyhole will disqualify the horse and rider.
4. A judge or judges must be at the keyhole to decide upon these disqualifications and their decisions shall be final.
5. If markers are used, they should be placed 5 feet apart on each corner of the 10-foot runway.

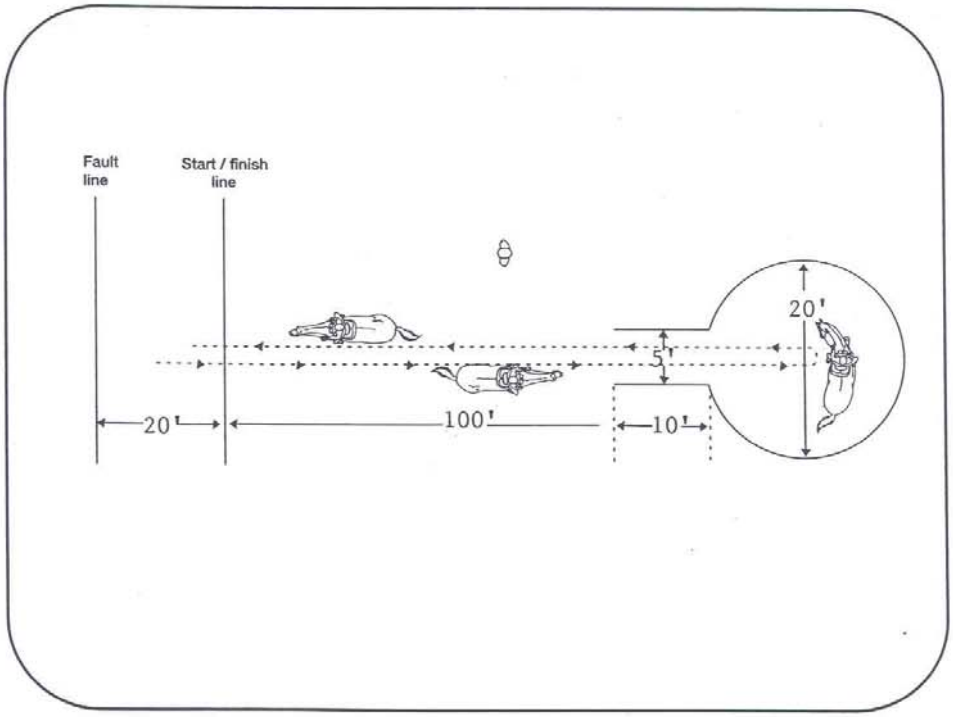

Purpose

Improves precision and control of speed; helps impatient riders develop patience.